PG79289 PG79389 Simple 5V/12V eFuse Protection Switches

Features

- 5V eFuse – PG79289
- 12V eFuse – PG79389
- Integrated 25mΩ Pass MOSFET
- Adjustable 2A to 5A current limit
- Adjustable input UVLO threshold
- Fixed over-voltage camp: 6.1V for PG79289 and 15V for PG79389
- Built-on over temperature protection
- Small 3x3mm VSON package
- RoHS compliant and Green

Applications

- Server and AUX supplies
- PCI and PCIe cards
- Adapter powered devices
- HDD and SSD drivers

Description

The PG79289 and PG79389 are active circuit protection devices with an integrated MOSFET used to limit current and voltage to safe levels during fault conditions.

The current limit level can be set with a resistor between ILIM and ground, and the typical current limit accuracy is ±15%.

The device has over voltage protection feature which limits the output voltage to a fixed level when over voltage fault occurs.

To limit the inrush current during device turn-on, the rising slew rate of output voltage can be set by a capacitor between dV/dT and ground.

The device also offers EN on/off control and input UVLO features.

The device is available in VSON 10 pins, 3x3 mm package.

PART NUMBER	PACKAGE	BODY SIZE
PG79289	VSON-10	3x3 mm
PG79389		

Typical Application Circuit

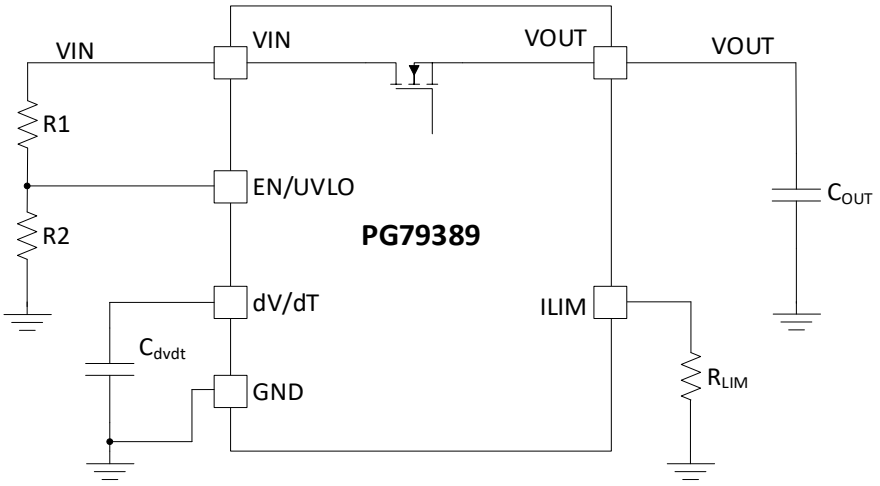

IPG SEMICONDUCTOR (SHENZHEN) CO.,LTD. All rights reserved.